Recurved Trumpet Lily

lily / 1.0.0 / A4 / Template page 1

P5 | cut 1
42.00 x 98.00 mm

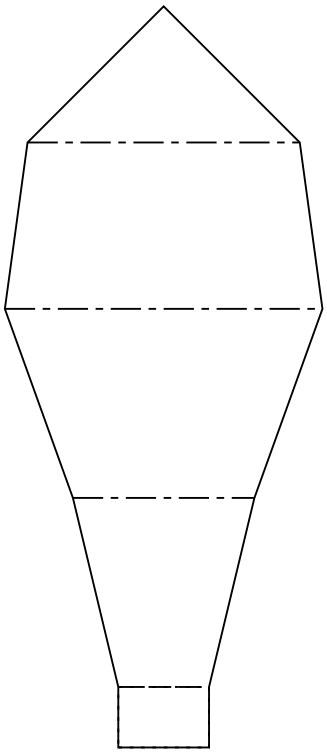

P6 | cut 1
42.00 x 98.00 mm

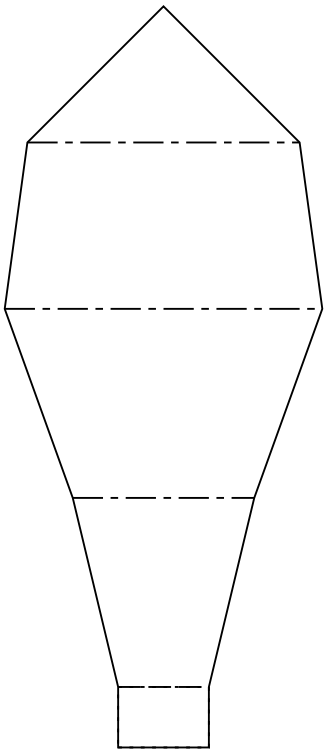

C1 | cut 1
8.00 x 57.00 mm

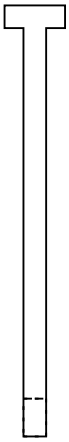

F1 | cut 1
3.00 x 47.00 mm

F2 | cut 1
3.00 x 47.00 mm

F3 | cut 1
3.00 x 47.00 mm

P1 | cut 1
42.00 x 98.00 mm

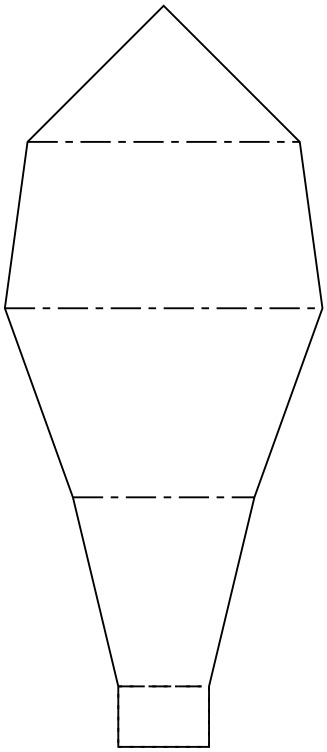

P2 | cut 1
42.00 x 98.00 mm

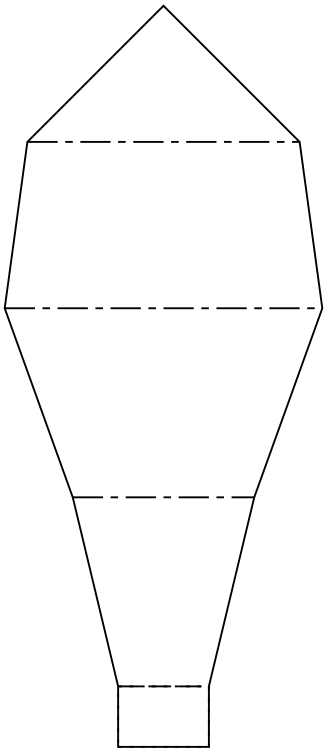

P3 | cut 1
42.00 x 98.00 mm

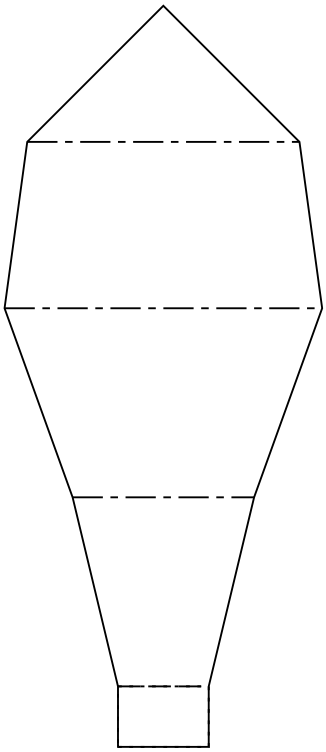

P4 | cut 1
42.00 x 98.00 mm

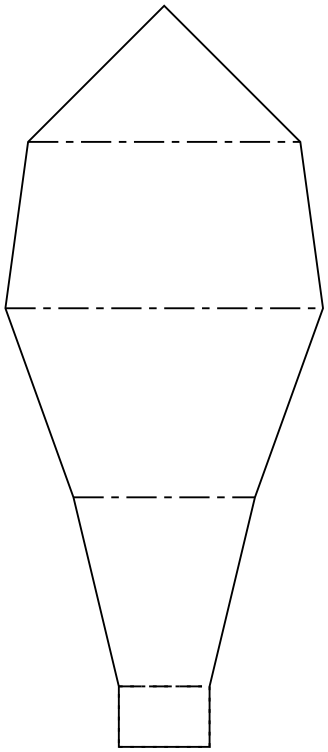

Solid: cut | Dashed: valley | Dash-dot: mountain | Dotted: glue

50 mm calibration

Print at 100% / Actual size. Do not fit to page. Original paper craft template.

Recurved Trumpet Lily

lily / 1.0.0 / A4 / Template page 2

A5 | cut 1
10.00 x 5.00 mm

A6 | cut 1
10.00 x 5.00 mm

F4 | cut 1
3.00 x 47.00 mm

F5 | cut 1
3.00 x 47.00 mm

F6 | cut 1
3.00 x 47.00 mm

B1 | cut 1
20.78 x 24.00 mm

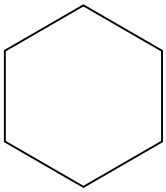

A1 | cut 1
10.00 x 5.00 mm

A2 | cut 1
10.00 x 5.00 mm

A3 | cut 1
10.00 x 5.00 mm

A4 | cut 1
10.00 x 5.00 mm

Solid: cut | Dashed: valley | Dash-dot: mountain | Dotted: glue

50 mm calibration

Print at 100% / Actual size. Do not fit to page. Original paper craft template.

Recurved Trumpet Lily

lily / 1.0.0 / A4 / Assembly instructions

Finished size: 145 x 126 x 52 mm approximately (flower head only)

Materials: 160-180 gsm ivory or pale pink paper for tepals; 180-220 gsm green paper for base and pistil; yellow paper for filaments; Brown paper for anthers; Scissors; Scoring tool and ruler; Protractor; PVA glue and tweezers

Original faceted lily interpretation: separate tepals form an open trumpet, not a sealed tube. No stem or hidden support.

Every blade, foot and filament is a piecewise rigid isometry of its printed cut polygon. Recurvature uses three discrete mountain folds, not compound curling.

View the printed face from above for valley/mountain directions. Elevation angles are measured from the horizontal base, not interior dihedral angles.

Paper thickness and glue films are omitted. Intentional bonded surfaces coincide in the zero-thickness model; stack feet in the stated order. Leave facets flat rather than stretching or rounding them.

Automated digital checks do not establish stability, stiffness or ease of handling the 3 mm filaments. Screen review and physical printing/cutting/assembly are pending.

Part inventory (cut each instance once):

B1: Hexagonal receptacle

P1: Pointed recurved tepal

F1: Upright filament with foot

A1: Brown pollen anther

P2: Pointed recurved tepal

F2: Upright filament with foot

A2: Brown pollen anther

P3: Pointed recurved tepal

F3: Upright filament with foot

A3: Brown pollen anther

P4: Pointed recurved tepal

F4: Upright filament with foot

A4: Brown pollen anther

P5: Pointed recurved tepal

F5: Upright filament with foot

A5: Brown pollen anther

P6: Pointed recurved tepal

F6: Upright filament with foot

A6: Brown pollen anther

C1: Central pistil and stigma

1. Prepare the receptacle [B1]: Print at 100% and check the 50 mm ruler. Cut B1, a regular hexagon with 12 mm sides. Keep it horizontal with the printed face up; number its sides clockwise 1 to 6.

Recurved Trumpet Lily

lily / 1.0.0 / A4 / Assembly instructions continued

2. Fold and attach alternate tepals [P1, P3, P5]: Cut P1/P3/P5. From the straight 12 mm root edge measure 8, 33, 58 and 80 mm to the four scores. Valley-fold at 8 mm by 70 degrees from flat; then mountain-fold by 25, 35 and 50 degrees respectively. Blade elevations become 70, 45, 10 and -40 degrees. Glue each full 12 x 8 mm foot beneath B1 at sides 1, 3 and 5, root score flush to the side and blade pointing outward. Hold each joint 60 seconds; let set 10 minutes.

3. Complete the six-point trumpet [P2, P4, P6]: Cut and fold P2/P4/P6 identically: 70-degree valley then 25/35/50-degree mountain turns at 8/33/58/80 mm from the root. Glue their 8 mm feet beneath sides 2/4/6. Keep the six radial axes 60 degrees apart. Feet may overlap beneath B1; do not glue blade edges together. Let the base dry flat for 15 minutes.

4. Stand the central pistil [C1]: Cut the T-shaped C1 without cutting off its 8 x 3 mm stigma. Valley-fold its 3 x 5 mm foot by 90 degrees. Glue the foot onto the top of B1 with its hinge at the hexagon centre; the stem stands 52 mm high. Point the foot toward a vertex between sides 5 and 6 to avoid the radial filament feet. Hold upright 60 seconds and set 10 minutes.

5. Fit three filaments [F1, F3, F5]: Cut F1/F3/F5. Valley-fold 85 degrees at the line 5 mm from the short foot end. Glue the 3 x 5 mm feet on top of B1 along the axes toward sides 1/3/5. Inner foot ends are 4 mm from centre; hinges are 9 mm from centre, 1.39 mm inside the side midpoints. The 42 mm stems lean outward 5 degrees from vertical. Hold and let set 10 minutes.

6. Fit the other three filaments [F2, F4, F6]: Repeat the 85-degree foot fold and measured radial placement for sides 2/4/6. Keep all six stems separate and uncreased above the foot. Their tips should stand about 41.8 mm above B1. Let dry 10 minutes before adding anthers.

7. Add alternate pollen anthers [A1, A3, A5]: Cut the 10 x 5 mm brown A1/A3/A5 rectangles. Glue the central 3 x 5 mm patch to the outer face of the final 5 mm of the matching filament. Top edges flush; the anther projects 3.5 mm sideways on each side. Keep it in the same tilted plane as the filament, not horizontal. Press with tweezers 30 seconds.

8. Complete and dry the flower [A2, A4, A6]: Attach A2/A4/A6 in the same way with a 3 x 5 mm contact patch. Support B1 level for 30 minutes or until the glue has set. Confirm six pointed tips turn downward, six brown anthers remain separate, and the green stigma rises above them. Physical assembly and stiffness verification remain pending.